Quick Release Cage Clamp
3/4 dia. Truss Tubes Model #CC0750

www.aurorap.com
6644 SE Jerry Dr.
Prineville Oregon
97754\541-362-5965

-Tapered holes for quick and smooth engage/release of the secondary cage, even in the dark

-Two locking pins form a rigid connection that maintain your collimation, no creep during the nights viewing

-Truss poles stay connected in pairs to speed assembly/disassembly

- Compact design for rigidity and dampening

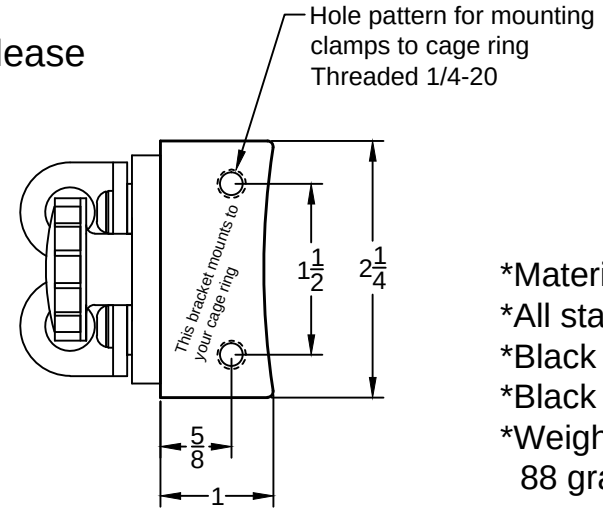

*Material is black anodized aluminum
*All stainless steel hardware
*Black phenolic knob with brass insert
*Black delrin bushings at all joints
*Weight of one assembly is 88 grams, 3.2 oz.

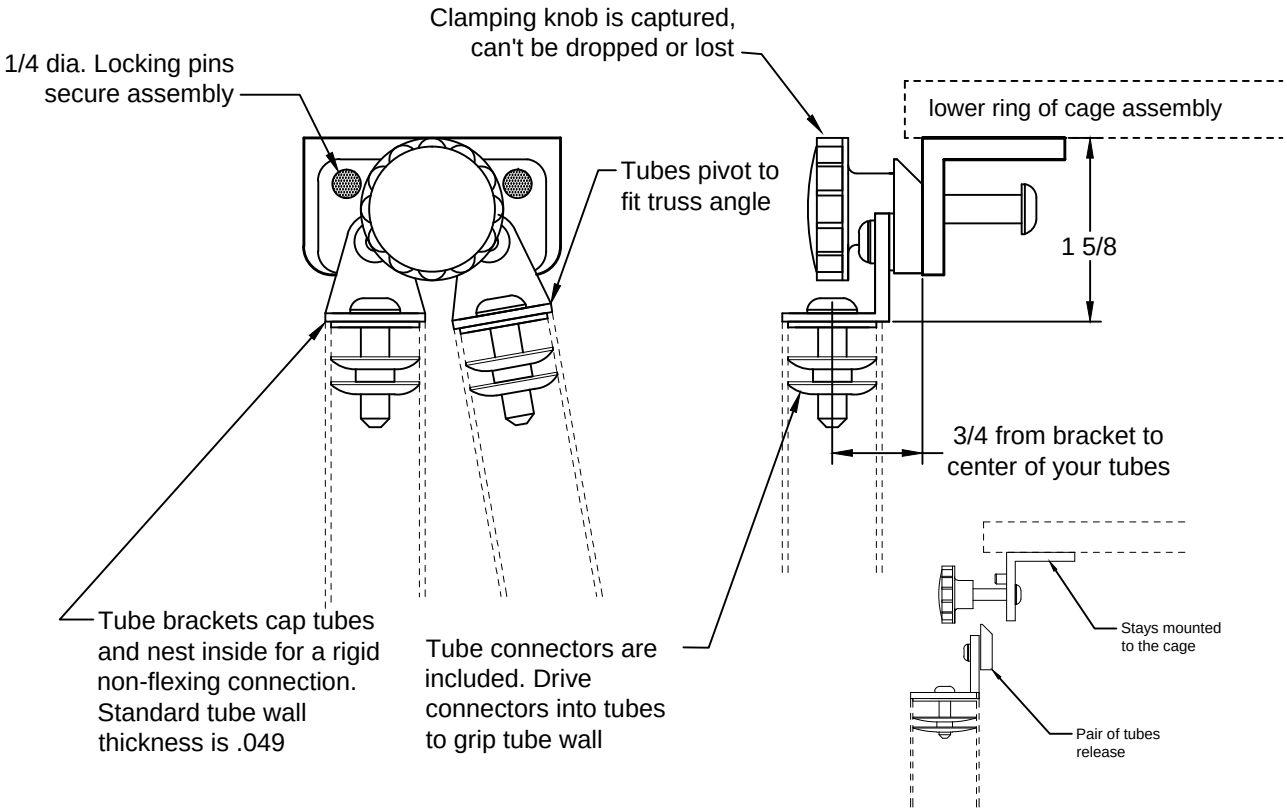

Alternate method of assembly.

Brackets are turned, allowing tubes to be under the cage ring. This may be helpful depending on your scope design, or to reduce the size of the mirror box.

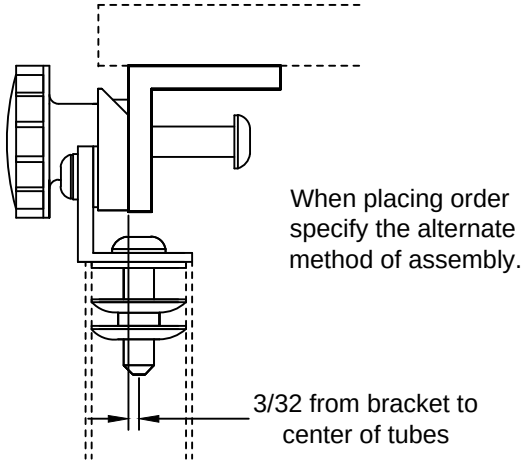

All dimensions are in inches.

Rev2 5-37-12